Axle Overload Monitoring for Medium and High Capacity Trucks

FEATURES

- Truck capacity more than 8.3 tons (US), 7.5 tonne (Europe)
- Accuracy – ± 3%
- Displays load as weight or percentage
- Enable balance load distribution
- AxleWatch – axle weight and overload indication
- Automatic trailer identification
- Serial printer support
- Telematics output
- Lightweight construction
- Easy to install
- CANbus interface to sensors

OPTIONAL FEATURES

- External alarm sounder
- Packer plate shutdown
- Barrier control output
- Printer – thermal or heavy duty
- Custom printer header
- 511 FreeWeigh – hand held remote

DISPLAY

- LCD with graphics
- Displays lbs or kg
- DIN or dash mount
- Gross/net
- Individual axle load
- Audible alarm
- Diagnostics

APPLICATIONS

- All vehicles with mechanical and/or air spring suspension

DESCRIPTION

TruckWeigh combines our patented axle transducer technology and air pressure sensors. The system derives the vehicle loading condition from axle deflection and can be fitted to any vehicle having mechanical suspension, air suspension, or a combination of both. Light in construction, TruckWeigh maximizes valuable payload capacity. State-of-the-art electronic sensors ensure maximum durability under harsh operating environments. With no moving parts, TruckWeigh is not susceptible to slipping out of calibration due to mechanical wear. Suitable for both DIN radio slot and dash mount, the TruckWeigh indicator displays the loading conditions of each axle, axle group, and/or complete vehicle. This system also includes the trailer identification functionality, negating the need for recalibration every time the trailer is swapped.

For continuous remote monitoring, TruckWeigh can also be linked to third party compatible tracking systems to relay the vehicle loading condition to the depot.

SYSTEM BLOCK DIAGRAM*

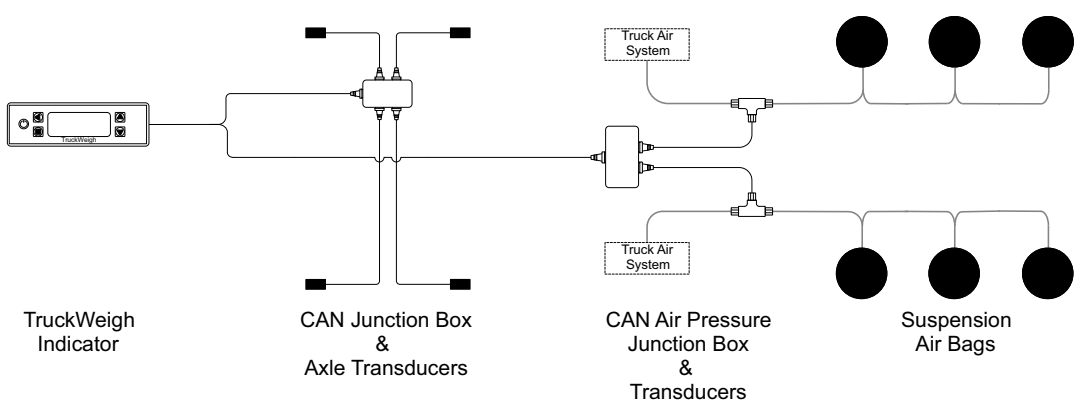

* 6 sensor system shown for example purposes only. Other configurations also available.

Axle Overload Monitoring for Medium and High Capacity Trucks

SPECIFICATIONS				
PARAMETERS	**MINIMUM**	**TYPICAL**	**MAXIMUM**	**UNIT**
SYSTEM				
Accuracy	Better than 3			% of Full Scale
Capacity (GVW)	8.3		66	tons
	7.5		60	Tonne
Operating voltage 12V trucks: 24V trucks:	11.5		15	VDC
	15		30	VDC
Operating temperature	-20		60	°C
	-4		140	°F
Current at 4 off sensors 12V trucks: 24V trucks:			400	mA
			300	mA
Current standby 12V trucks: 24V trucks:			5	mA
			10	mA
Weighing modes	Net, gross, axles			
INDICATOR				
Display type	LCD			
Size	3.11 x 1.22			inches
	79.0 x 30.9			mm
Operating temperature	14 to 104°			F
	-10 to +50°			C
Environmental protection	IP20			
Display resolution	240 x 90			Dots
Signal input port	4 pin connector (for junction box)			
Expansion port	12 way Molex mini-fit connector			
On screen display of weight				
Overload alarm - audible	Optional external alarm sounder on vehicle			
Alarm output level (at 24VDC)		102		dB(A)
Password protection	4 digits, manager and user PIN			
Load deliver capability				
Form factor	DIN cut out			
TRANSDUCERS				
Transducer types	Up to 8 CANbus axle or air transducers			
INTERFACES				
RS232: Baud rate Connector	1200, 2400, 9600, 19200, 57600 9 pin to printers / scoreboard			bps
ACCESSORIES AND OPTIONS				
Packer plate shutdown	1 x N/O volt-free contact			
Barrier control	Supply voltage output to vehicle body			
511 FreeWeigh compatible	Wireless remote unit, 868MHz band, 15 channels			
Printer capability	Impact or heavy-duty type			
Adjustable bracket				

Disclaimer

ALL PRODUCTS, PRODUCT SPECIFICATIONS AND DATA ARE SUBJECT TO CHANGE WITHOUT NOTICE.

Vishay Precision Group, Inc., its affiliates, agents, and employees, and all persons acting on its or their behalf (collectively, "VPG"), disclaim any and all liability for any errors, inaccuracies or incompleteness contained herein or in any other disclosure relating to any product.

The product specifications do not expand or otherwise modify VPG's terms and conditions of purchase, including but not limited to, the warranty expressed therein.

VPG makes no warranty, representation or guarantee other than as set forth in the terms and conditions of purchase. **To the maximum extent permitted by applicable law, VPG disclaims (i) any and all liability arising out of the application or use of any product, (ii) any and all liability, including without limitation special, consequential or incidental damages, and (iii) any and all implied warranties, including warranties of fitness for particular purpose, non-infringement and merchantability.**

Information provided in datasheets and/or specifications may vary from actual results in different applications and performance may vary over time. Statements regarding the suitability of products for certain types of applications are based on VPG's knowledge of typical requirements that are often placed on VPG products. It is the customer's responsibility to validate that a particular product with the properties described in the product specification is suitable for use in a particular application. You should ensure you have the current version of the relevant information by contacting VPG prior to performing installation or use of the product, such as on our website at vpgsensors.com.

No license, express, implied, or otherwise, to any intellectual property rights is granted by this document, or by any conduct of VPG.

The products shown herein are not designed for use in life-saving or life-sustaining applications unless otherwise expressly indicated. Customers using or selling VPG products not expressly indicated for use in such applications do so entirely at their own risk and agree to fully indemnify VPG for any damages arising or resulting from such use or sale. Please contact authorized VPG personnel to obtain written terms and conditions regarding products designed for such applications.

Product names and markings noted herein may be trademarks of their respective owners.

Copyright Vishay Precision Group, Inc., 2014. All rights reserved.